No.	REVISIONS	DATE	BY
A	RELEASE TO PRODUCTION	03/06/2007	JAG

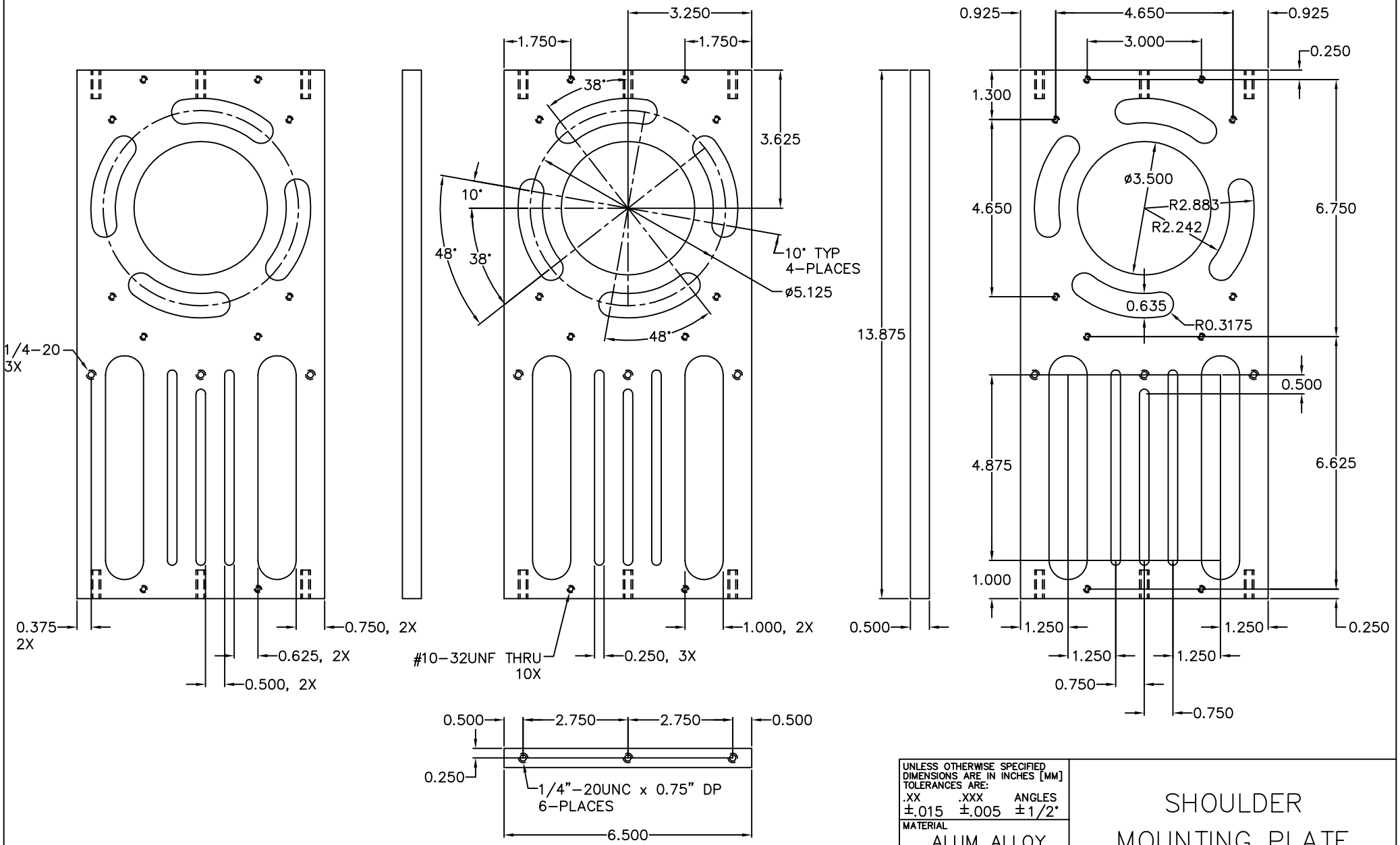

UNLESS OTHERWISE SPECIFIED DIMENSIONS ARE IN INCHES [MM]
TOLERANCES ARE:

.XX	.XXX	ANGLES
±.015	±.005	±1/2°

MATERIAL
ALUM ALLOY
6061-T6

FINISH
NONE

SHOULDER MOUNTING PLATE

DRAWING NO. JAG04

REV. A

DO NOT SCALE DRAWING | SCALE: FULL | DRAWN: JAG 03/06/2007 | SHEET: 1 OF 1